1. DESCRIPTION

2. APPLICATIONS

-
-
-

3. FEATURES

-
-
-
-
-
-
-
-
-
-

4. TYPICAL APPLICATION CIRCUIT

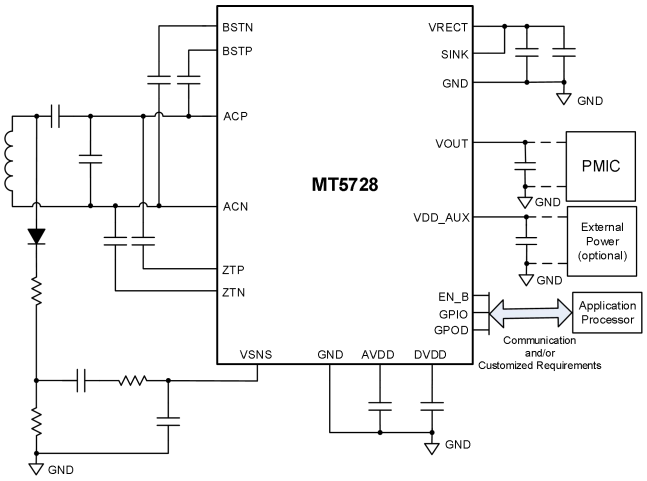

Figure 1 Typical Application Circuit